PIPE WELD SEAM:

COURSE	ORIENTATION
1	135°

Ship loose items:
NONE

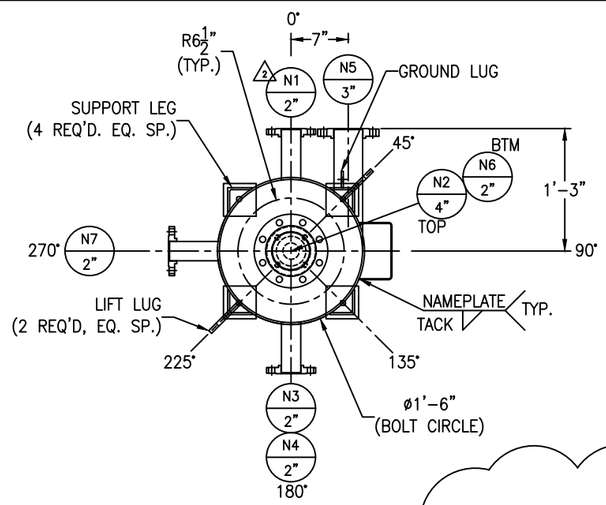

*NOTE: ALL ELEVATIONS ARE PULLED FROM WELD SEAM FOR EASE OF FABRICATION

NOTE 5: PICKLE ALL EXTERIOR WELDS. INTERIOR TO BE #4 POLISH & PASSIVATE INTERIOR & EXTERIOR OF VESSEL. 2
NOTE 6: INTERIOR WELDS TO BE GROUND SMOOTH NOT FLUSH.

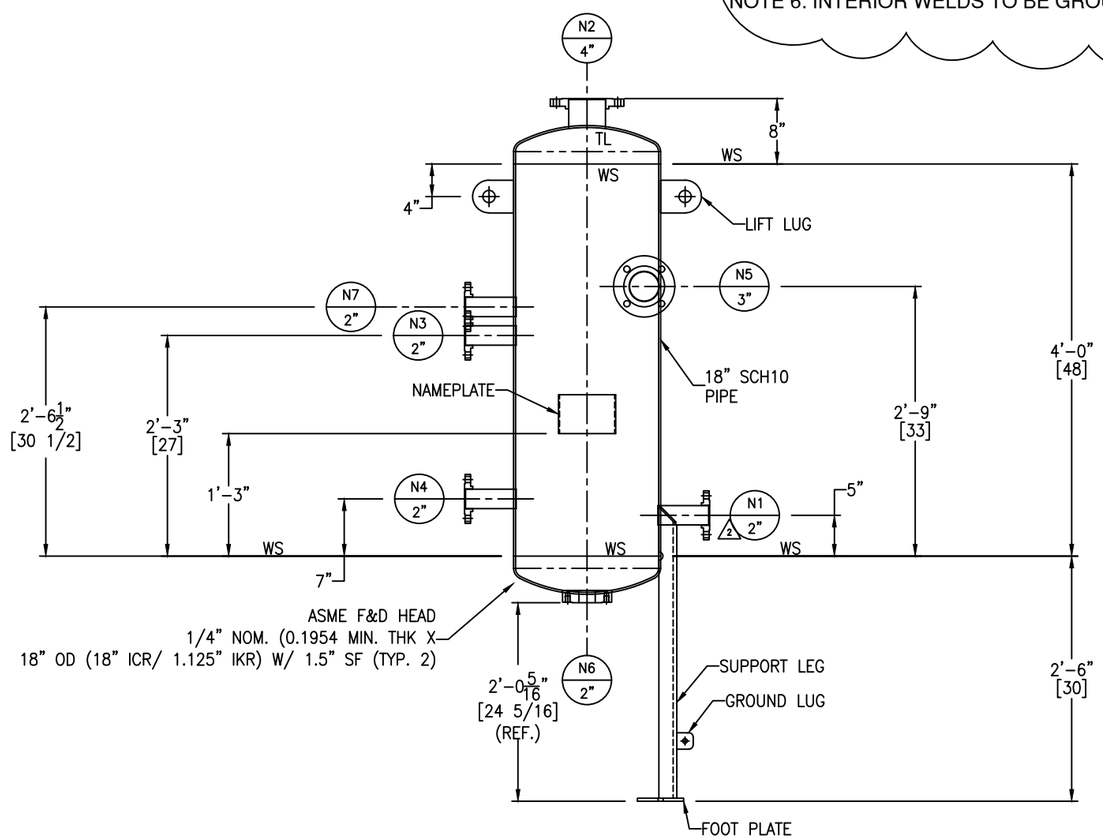

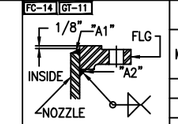

FIGURE NO. 1

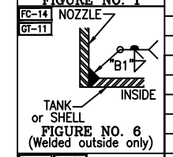

FIGURE NO. 6
(Welded outside only)

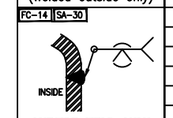

OUTSIDE WELD ONLY FOR HEADS
FIGURE NO. 11

NOZZLE SCHEDULE

MARK	SERVICE	SIZE	RATING	TYPE / STYLE	NECK SCHED.	PROJECTION EXT. (℄)	PROJECTION INT. (MIN.)	WELD FIGURE	REPAD SIZE (WIDTH X THK.)	WELD SIZE "A1"	"A2"	"B1"	"B2"	"C1"	"C2"
N1	LIQUID INLET	2 2"	150#	RFSO	40S	6"	–	1,6	–	1/4	5/16	1/4	–	–	–
N2	VENT	4"	150#	RFSO	40S	SEE DWG	–	1,6	–	1/4	3/8	1/4	–	–	–
N3	HI LEVEL SWITCH	2"	150#	RFSO	40S	6"	–	1,6	–	3/16	1/4	3/16	–	–	–
N4	LO LEVEL SWITCH	2"	150#	RFSO	40S	6"	–	1,6	–	3/16	1/4	3/16	–	–	–
N5	VAPOR INLET	3"	150#	RFSO	40S	SEE DWG	–	1,6	–	1/4	5/16	1/4	–	–	–
N6	BOTTOM OUTLET	2"	150#	RF STUDPAD	–	–	–	6	–	–	–	1/4	–	–	–
N7	HI HI LEVEL SWITCH	2"	150#	RFSO	40S	6"	–	1,6	–	3/16	1/4	3/16	–	–	–

MATERIALS OF CONSTRUCTION

	VESSEL
SHELL	SA312-316/316L WLD (#4 POLISH INSIDE)
HEADS	SA240-316/316L (#4 POLISH INSIDE)
RIM ANGLE	–
NOZZLE NECKS	SA312-316/316L WLD (#4 POLISH INSIDE)
NOZZLE FLANGES	SA182F-316/316L
MANWAY NECKS	–
MANWAY FLANGES	–
GASKETS	PTFE
BOLTS/STUDS	SA193-B7 (ZINC PLATED)
NUTS	SA194-2H (ZINC PLATED)
STUDPADS	SA182F-316/316L
COUPLINGS	–
SUPPORTS/HOLD DOWNS	SA479-304/304L & SA240-304/304L
LIFTING LUGS	SA240-304/304L
VACUUM RINGS	–
INSULATION RINGS	–
GROUND LUG	SA240-304/304L
BAFFLE	–
LADDER	–
TANK CLIPS (LADDER)	–
HANDRAIL	–
HANDRAIL CLIPS	–
PLATFORM	–
PLATFORM CLIPS	–
DIPTUBE SUPPORT	–
JACKET SHELL	–
JACKET HEADS	–
JACKET NOZZLE NECKS	–
JACKET NOZZLE FLANGES	–

DESIGN DATA

	VESSEL
DESIGN AND FAB. CODE	ASME
CERT. STAMP REQ'D.	YES
DESIGN PRESSURE	1 100 PSI/ FV
DESIGN TEMPERATURE	250° F
MIN. DESIGN METAL TEMP.	-20° F @ 100 PSIG
OPERATING PRESSURE	1 10 TORR
OPERATING TEMPERATURE	1 20° F
JOINT EFFICIENCY HEADS	0.70
JOINT EFFICIENCY SHELL	0.70
CORROSION ALLOWANCE	0"
SPECIFIC GRAVITY	1.04
EARTHQUAKE ZONE	Ss = (0.550) S1 = (0.160)
WIND LOAD	INDOOR
STRESS RELIEF	NOT REQ'D
RADIOGRAPHIC EXAM	NOT REQ'D
DYE PENETRANT EXAM	NOT REQ'D
MAGNETIC PARTICLE EXAM	NOT REQ'D
HYDROSTATIC TEST	1 130 PSIG
PNEUMATIC TEST	–
JKT HYDRO TEST	–
JKT DESIGN AND FAB. CODE	–
JKT CERT. STAMP REQ'D.	–
JKT DESIGN PRESSURE	–
JKT DESIGN TEMPERATURE	–
JKT MIN. DESIGN METAL TEMP.	–
JKT OPERATING PRESSURE	–
JKT OPERATING TEMPERATURE	–
JKT JOINT EFFICIENCY HEADS	–
JKT JOINT EFFICIENCY SHELL	–

VESSEL FINISH

INTERIOR WELD TREATMENT:	SEE NOTE 6
EXTERIOR WELD TREATMENT:	SAV TANK STANDARD
SAV TANK FINISHING STANDARD:	SEE NOTE 5
INSULATION:	N/A
PAINTING:	N/A

VESSEL CAPACITY AND WEIGHTS

OPERATING CAPACITY	40 GAL.
FULL CAPACITY	50 GAL.
EMPTY SHIPPING WEIGHT	400 LBS.
WEIGHT FULL OF WATER	870 LBS.
WEIGHT FULL OF PRODUCT	870 LBS.

ASME SECT. VIII, DIV. 1
2023 EDITION

ENG. _____ DATE: _____
Q.C. _____ DATE: _____
A.I. _____ DATE: _____

This drawing is issued for customer approval. please review, make approval changes (if any) in red. check the appropriate box, sign & date.

- ☐ Approval – no changes. Please proceed with fabrication.
- ☐ Approved as noted. Please proceed with fabrication
- ☐ Not approved. Please make changes and resubmit.

Customer signature _____ Date _____

GENERAL NOTES

1.) COVER ALL FLANGES, OPENINGS & MACHINED SURFACES PRIOR TO SHIPMENT UNLESS OTHERWISE NOTED.
2.) BOLT HOLES TO STRADDLE 0° & 180° UNLESS OTHERWISE NOTED.
3.) ASME CODE VESSELS TO BE IN ACCORDANCE WITH UG-80 & UG-81. TOLERANCES: +/- 1/8" FOR DIMENSIONS AND +/- 2 DEGREES FOR ORIENTATIONS.
4.) ASME MATERIALS TO CONFORM TO THE FOLLOWING: FLANGES – B16.5, FITTINGS – B16.9 & COUPLINGS – B16.11.
5.) PICKLE ALL EXTERIOR WELDS. INTERIOR TO BE #4 POLISH & PASSIVATE INTERIOR & EXTERIOR OF VESSEL. 2
6.) INTERIOR WELDS TO BE GROUND SMOOTH NOT FLUSH.

REVISIONS

REV	D.BY	C.BY	DATE	DESCRIPTION
				AS BUILT
2	RS	NP	1/30/26	CERTIFIED
1	RS	NP	1/21/26	APPROVAL REV 1
0	AD	RS	11/21/25	APPROVAL

Savannah Tank & Equipment Corp.
1517 Telfair Road, Savannah, GA 31415
(912) 233-8902

DRAWN BY: AD
CHK'D BY: RS
APPROVED BY: NP
SCALE: 1" = 1'-0"

EPIC SYSTEMS GROUP, LLC.
VACUUM PUMP CONDENSATE RECEIVER
EQUIP. #V-104
CUST. PO #64350

DRAWING NO.: 115-25-1 SHT 1 OF 2 REV. SET 2

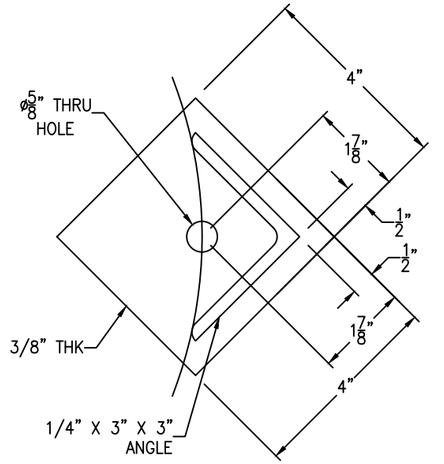

FOOT PLATE DETAIL

(4 REQ'D) SCALE: 6" = 1'-0"

FC-14

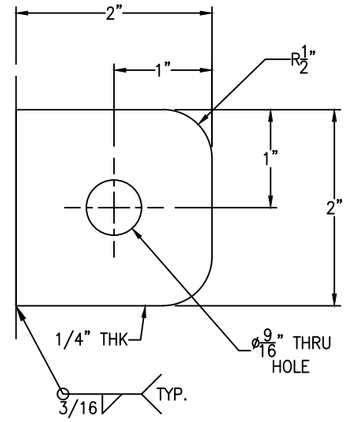

GROUND LUG IS LOCATED @ 0°

GROUND LUG DETAIL

(1 REQ'D) SCALE: 1'-0" = 1'-0"

FC-14

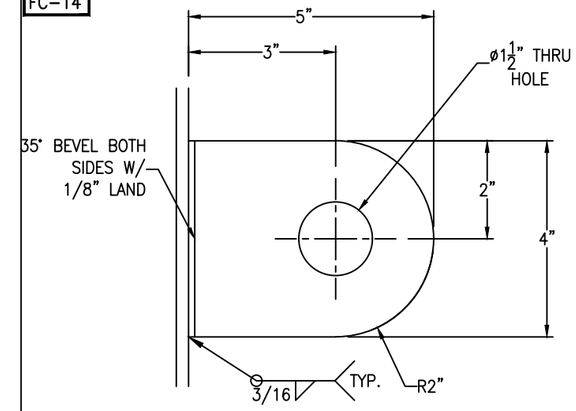

TANK WT. <= 5000#
SHACKLE PIN DIA. = 3/4"

LIFT LUG DETAIL

(2 REQ'D) SCALE: 6" = 1'-0"

FC-14

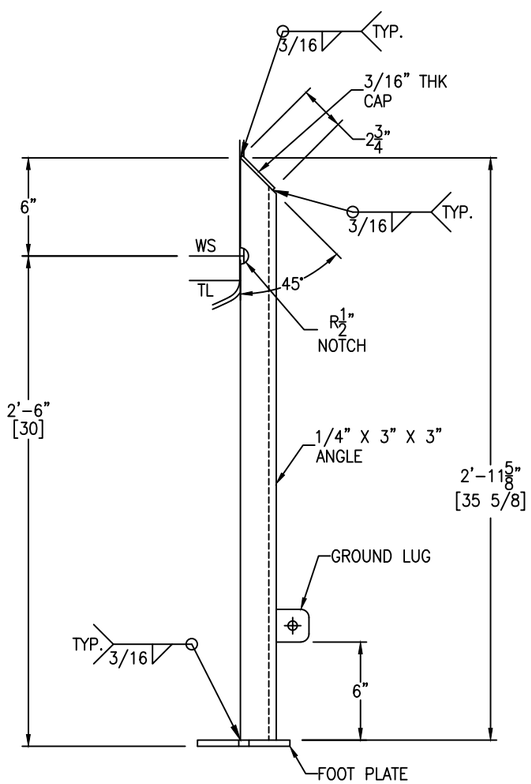

SUPPORT LEG DETAIL

(4 REQ'D) SCALE: 2" = 1'-0"

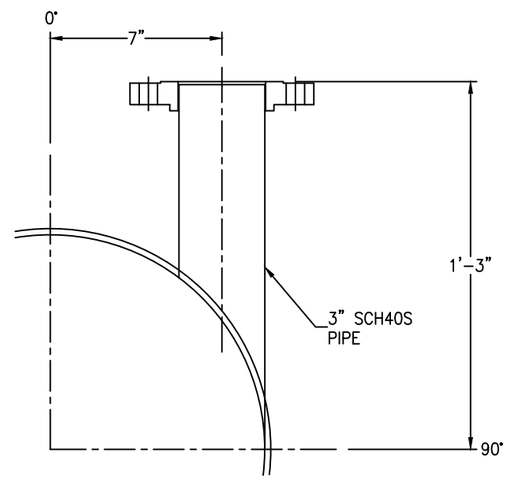

NOZZLE N5 DETAIL

SCALE: 3" = 1'-0"

REV	D.BY	C.BY	DATE	DESCRIPTION
				AS BUILT
2	RS	NP	1/30/26	CERTIFIED
1	RS	NP	1/15/26	APPROVAL REV 1
0	AD	RS	11/21/25	APPROVAL

⚠ REVISIONS

Savannah Tank & Equipment Corp.
1517 Telfair Road, Savannah, GA 31415
(912) 233-8902

DRAWN BY: AD
CHK'D BY: RS
APPROVED BY: NP
SCALE: 1" = 1'-0"

EPIC SYSTEMS GROUP, LLC.
VACUUM PUMP CONDENSATE RECEIVER
EQUIP. #V-104
CUST. PO #64350

DRAWING NO.: 115-25-2 | SHT 2 OF 2 | REV. SET 1